OZ MACHINE USA

PRO 1100

Fully Automatic Horizontal Stretch Wrapping Line

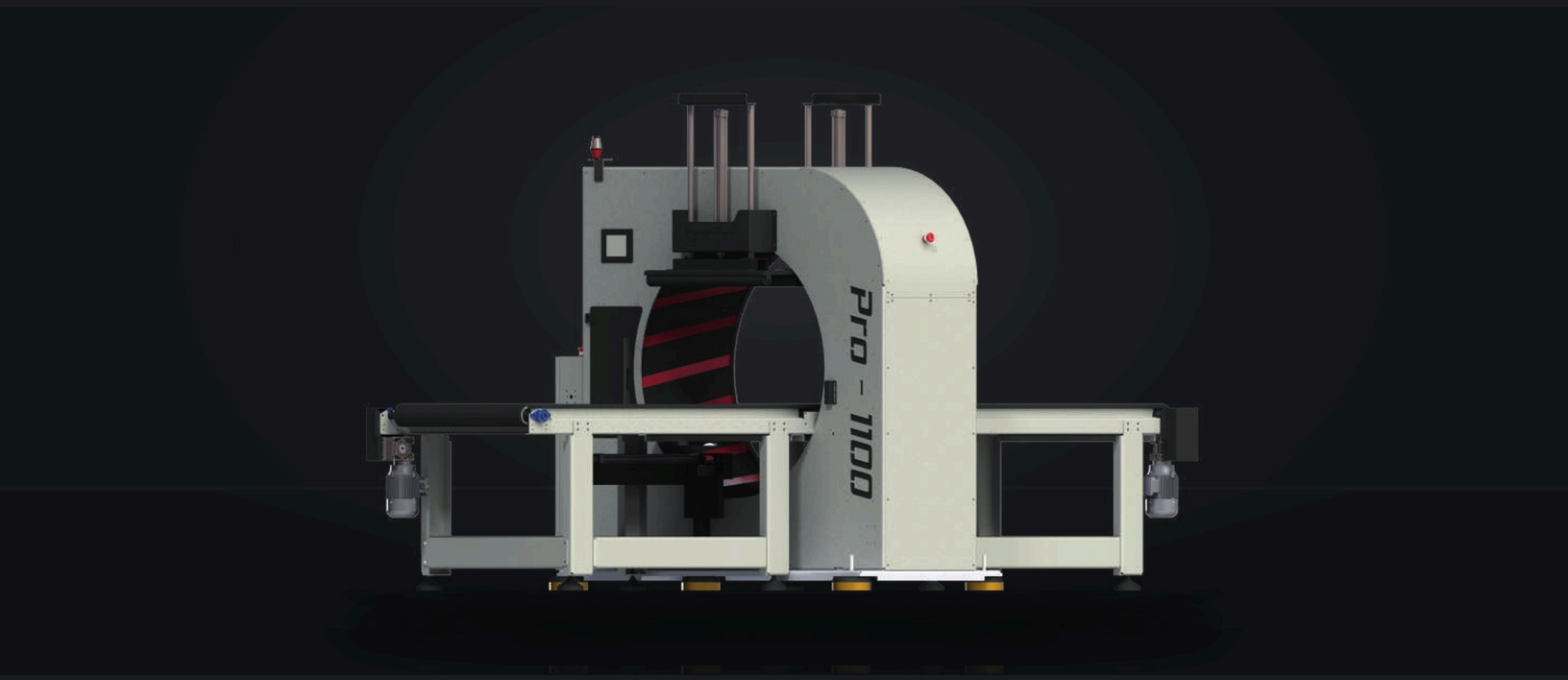

An automatic wrapping line for doors, panels and furniture parts. Three film widths cover short and long products, and the touch panel recipes, photocell and automatic clamping and cutting keep the line running at 90 rpm.

43.3"	90 rpm	38.6 x 5.9"	7"
Ring diameter	Ring speed	Max. panel passage	Touch panel, recipes

KEY FEATURES

+ 7" touch panel with unlimited recipes
+ Round products from 15.7" diameter
+ Short-part bridge as standard
+ Three film widths: 5", 6.7", 9.85"
+ Automatic top pressure, clamping and cutting
+ Remote access

Power	Voltage	Air	Dimensions (W x L x H)	Weight
2.25 kW / 3 HP	220V 3P, 60 Hz	100 psi	76.8 x 157.5 x 82.7"	1,808 lb

TECHNICAL DATA

PRO 1100

Fully Automatic Horizontal Stretch Wrapping Line

OZ MACHINE USA

WRAPPING

Ring diameter (clear opening)	43.3" (1100 mm)
Ring speed	90 rpm
Max. passage, panel	38.6" x 5.9" (980 x 150 mm)
Max. passage, cabinet	27.6" x 21.7" (700 x 550 mm)
Min. length, 5" film (bridge)	11.8" (300 mm)
Min. length, 10" film (bridge)	21.7" (550 mm)
Round products, min.	Ø 15.7" (400 mm)

STRETCH FILM

Film width	5" / 6.7" / 9.85" (125 / 170 / 250 mm)
Film roll outer diameter	8.3"
Roll core	3" (76 mm)
Film thickness	12–35 µm

CONVEYOR

Conveyor (W x L)	29.5" x 70.9" (750 x 1800 mm)
Load	60 lb/ft (90 kg/m)
Working height	29.5"–31.5" (750–800 mm)

STANDARD EQUIPMENT

7" touch panel, unlimited recipes	●
Film tensioner with constant tension system	●
Photocell product detection	●
Automatic top pressure rollers	●
Automatic film clamping and cutting	●
Motorized belt conveyors, speed and reverse	●
Adjustable short-part bridge	●
Package counter, remote access	●

OPTIONAL EQUIPMENT

Integrated labeling system	○
Label scanner and reprint system	○
Film break detection and auto-stop	○
AI vision operator (sets the wrap program)	○
Double film carriage (2x speed)	○
Motorized short-part bridge	○
W unit (bubble / foam wrap)	○

AIR & ELECTRICAL

Power	2.25 kW (3 HP)
Voltage	220V 3P, 60 Hz (480V 3P option)
Air	100 psi, ~0.7 CFM

DIMENSIONS & WEIGHT

W x L x H	76.8 x 157.5 x 82.7" (1950 x 4000 x 2100 mm)
Weight	1,808 lb (820 kg)

● Standard ○ Optional

PRO 1100

Fully Automatic Horizontal Stretch Wrapping Line

OZ MACHINE USA

FRONT AND SIDE VIEW

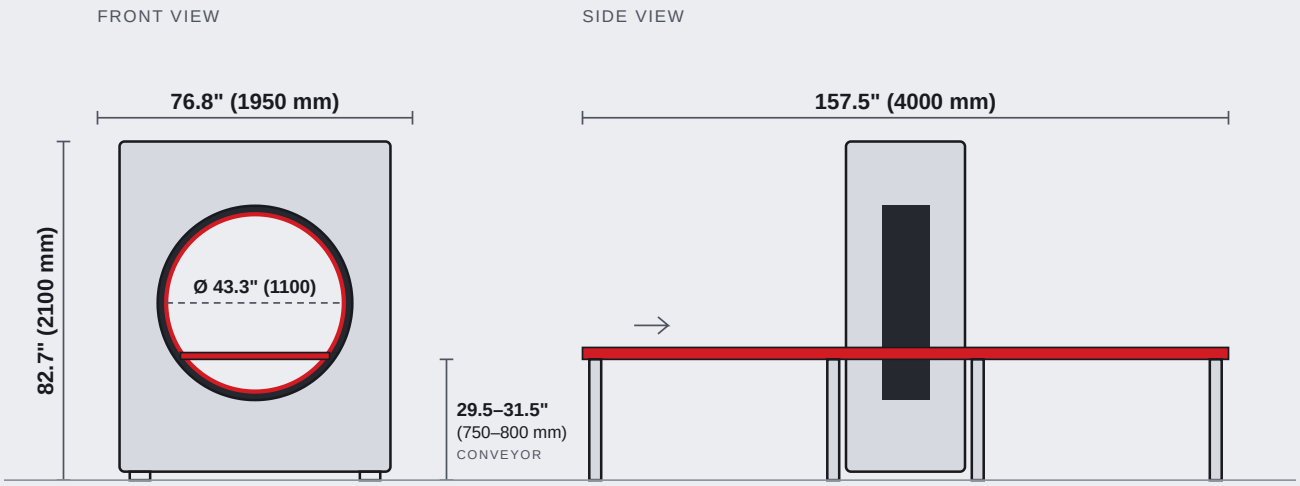

Simplified layout. Dimensions in inches (millimeters).

PRODUCT PASSAGE

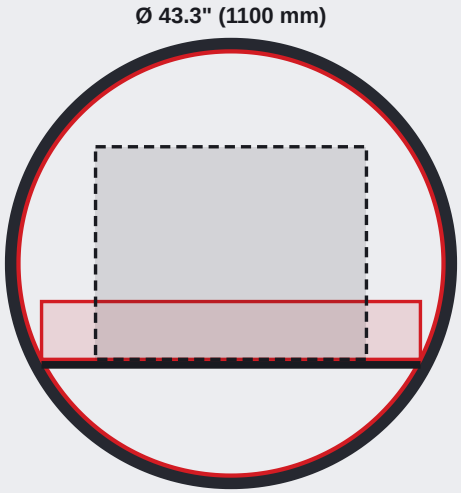

MAX. PRODUCT SECTION (W x H)

PANEL
38.6" x 5.9" (980 x 150 mm)

CABINET
27.6" x 21.7" (700 x 550 mm)

Max. product section through the ring, drawn to scale. Inches (millimeters).

OZ MACHINE USA
2690 West 3rd Court, Hialeah, FL 33010
+1 833-390-0060 (toll-free) · sales@ozmachineusa.com

USA · CANADA · MEXICO

Product data, descriptions and illustrations may change without prior notice.