OZ MACHINE USA

PRO 2200

Fully Automatic Horizontal Stretch Wrapping Line



The largest ring in the range, for big cabinets, crates and pallet-size loads up to 59.1" x 47.2". It runs 9.85" or 19.7" film, and conveyors are sized to the application.

85.4"	55 rpm	59.1 x 47.2"	19.7"
Ring diameter	Ring speed	Max. product passage	Max. film width

KEY FEATURES

- 7" touch panel with unlimited recipes
- 9.85" or 19.7" film
- Automatic top pressure, clamping and cutting
- Loads up to 59.1" x 47.2"
- Constant film tension system
- Conveyors built per application

Power	Voltage	Air	Dimensions (W x L x H)	Weight
3 kW / 4 HP	220V 3P, 60 Hz	100 psi	126.0 x 82.7 x 112.2"	6,173 lb

TECHNICAL DATA

PRO 2200

Fully Automatic Horizontal Stretch Wrapping Line

OZ MACHINE USA

WRAPPING

Ring diameter (clear opening)	85.4" (2170 mm)
Ring speed	55 rpm
Max. product passage	59.1" x 47.2" (1500 x 1200 mm)
Min. product length (with bridge)	29.5" (750 mm)

STRETCH FILM

Film width	9.85" / 19.7" (250 / 500 mm)
Film roll outer diameter	9.25" (235 mm)
Roll core	3" (76 mm)
Max. roll weight	17.6 / 33 lb (8 / 15 kg)
Film thickness	17–35 µm

CONVEYOR

Conveyors	Custom (per application)
Working height	33.5"–37.4" (850–950 mm)

STANDARD EQUIPMENT

7" touch panel, unlimited recipes	●
Film tensioner with constant tension system	●
Photocell product detection	●
Automatic top pressure rollers	●
Automatic film clamping and cutting	●
Motorized belt conveyors, speed and reverse	●
Adjustable short-part bridge	●
Package counter, remote access	●

OPTIONAL EQUIPMENT

Integrated labeling system	○
Label scanner and reprint system	○
Film break detection and auto-stop	○
AI vision operator (sets the wrap program)	○
Double film carriage (2x speed)	○
Motorized short-part bridge	○
W unit (bubble / foam wrap)	○

AIR & ELECTRICAL

Power	3 kW (4 HP)
Voltage	220V 3P, 60 Hz (480V 3P option)
Air	100 psi, ~1.4 CFM

DIMENSIONS & WEIGHT

W x L x H	126.0 x 82.7 x 112.2" (3200 x 2100 x 2850 mm)
Weight	6,173 lb (2800 kg)
Note	Excluding conveyors

● Standard ○ Optional

PRO 2200

Fully Automatic Horizontal Stretch Wrapping Line

OZ MACHINE USA

FRONT AND SIDE VIEW

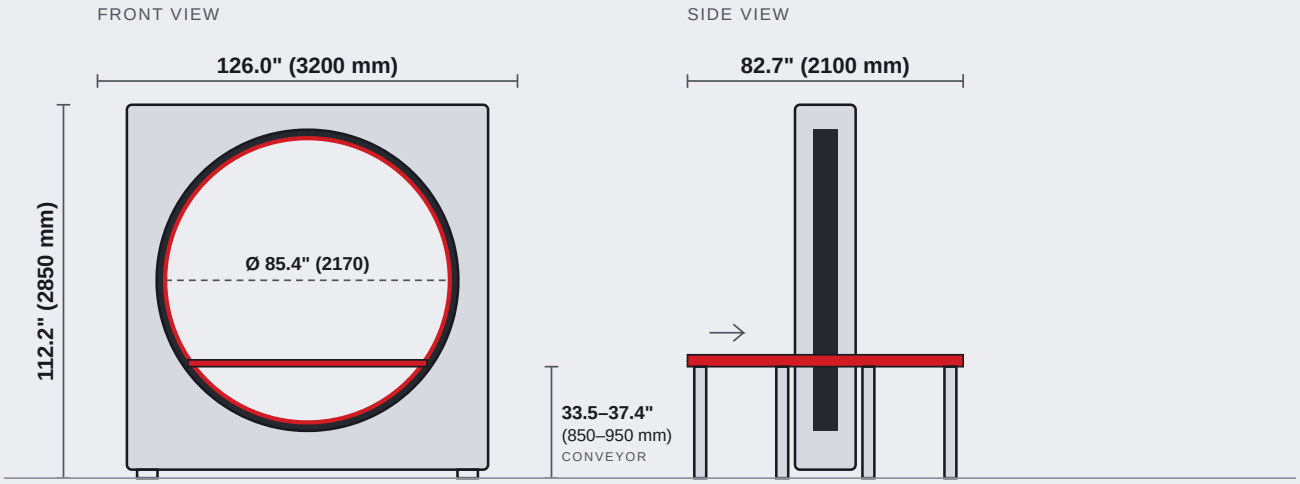

CONVEYORS NOT INCLUDED IN DIMENSIONS

Simplified layout. Dimensions in inches (millimeters).

PRODUCT PASSAGE

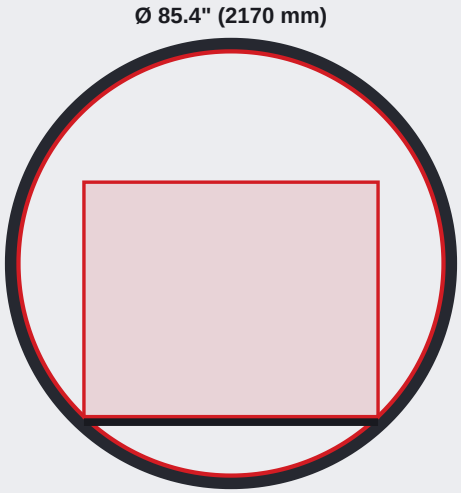

MAX. PRODUCT SECTION (W x H)

MAX. W x H
59.1" x 47.2" (1500 x 1200 mm)

Max. product section through the ring, drawn to scale. Inches (millimeters).

OZ MACHINE USA
2690 West 3rd Court, Hialeah, FL 33010
+1 833-390-0060 (toll-free) · sales@ozmachineusa.com

USA · CANADA · MEXICO

Product data, descriptions and illustrations may change without prior notice.