OZ MACHINE USA

PRO 1400

Fully Automatic Horizontal Stretch Wrapping Line

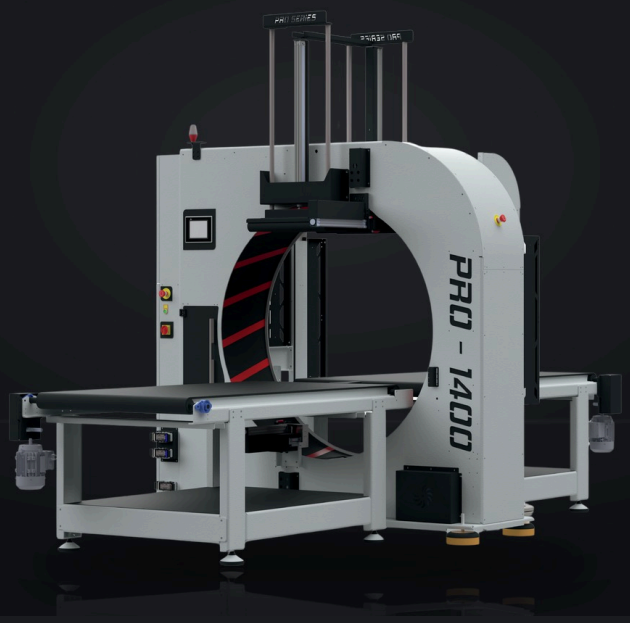

An automatic line for panels up to 50" wide and cabinets up to 35.4" x 29.9". Touch panel recipes, the constant tension system and automatic clamping and cutting run the cycle; a W unit can be added to cover products in bubble or foam wrap first.

53.9"	5–90 rpm	50.0"	35.4 x 29.9"
Ring diameter	Ring speed	Max. panel width	Max. cabinet section

KEY FEATURES

- 7" touch panel with unlimited recipes
- Cabinets up to 35.4" x 29.9"
- Infeed lifting platform option
- Panels up to 50.0" wide
- Constant film tension system
- W unit option for bubble / foam wrap

Power	Voltage	Air	Dimensions (W x L x H)	Weight
2.25 kW / 3 HP	220V 3P, 60 Hz	100 psi	88.6 x 157.5 x 102.4"	2,094 lb

TECHNICAL DATA

PRO 1400

Fully Automatic Horizontal Stretch Wrapping Line

OZ MACHINE USA

WRAPPING

Ring diameter (clear opening)	53.9" (1370 mm)
Ring speed	5–90 rpm
Max. passage, panel	50.0" x 11.8" (1270 x 300 mm)
Max. passage, cabinet	35.4" x 29.9" (900 x 760 mm)
Min. product length (with bridge)	23.6" (600 mm)
Round products, min.	Ø 13.8" (350 mm)

STRETCH FILM

Film width	9.84" (250 mm)
Film roll outer diameter	8.66" (220 mm)
Roll core	3" (76 mm); 1.5" (38 mm) option
Film thickness	15–30 µm

CONVEYOR

Standard (W x L)	35.4" x 70.9" (900 x 1800 mm)
Option	39.4" x 70.9" (1000 x 1800 mm)
Load	60 lb/ft (90 kg/m)
Working height	35.4" (900 mm)

STANDARD EQUIPMENT

7" touch panel, unlimited recipes	●
Film tensioner with constant tension system	●
Photocell product detection	●
Automatic top pressure rollers	●
Automatic film clamping and cutting	●
Motorized belt conveyors, speed and reverse	●
Adjustable short-part bridge	●
Package counter, remote access	●

OPTIONAL EQUIPMENT

Integrated labeling system	○
Label scanner and reprint system	○
Film break detection and auto-stop	○
AI vision operator (sets the wrap program)	○
Double film carriage (2x speed)	○
Motorized short-part bridge	○
Infeed lifting platform	○

W UNIT (OPTIONAL) ○

Max. bubble / foam width	53.1" (1350 mm)
Bubble roll	OD 28.3" (720 mm); core 0.8" / 1.5" / 3"
Line size	232.3 x 86.6 x ~104" (5900 x 2200 x ~2650 mm)
Line weight / power	3,197 lb (1450 kg) / 4.4 kW (6 HP)

AIR & ELECTRICAL

Power	2.25 kW (3 HP)
Voltage	220V 3P, 60 Hz (480V 3P option)
Air	100 psi, ~1.0 CFM

DIMENSIONS & WEIGHT

W x L x H	88.6 x 157.5 x 102.4" (2250 x 4000 x 2600 mm)
Weight	2,094 lb (950 kg)

● Standard ○ Optional

PRO 1400

Fully Automatic Horizontal Stretch Wrapping Line

OZ MACHINE USA

FRONT AND SIDE VIEW

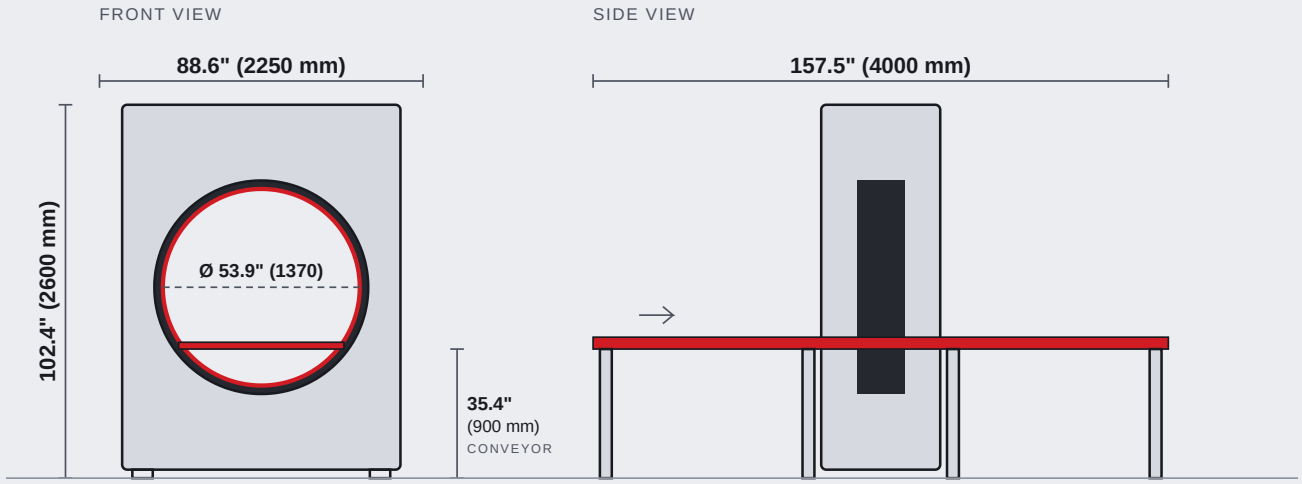

Simplified layout. Dimensions in inches (millimeters).

PRODUCT PASSAGE

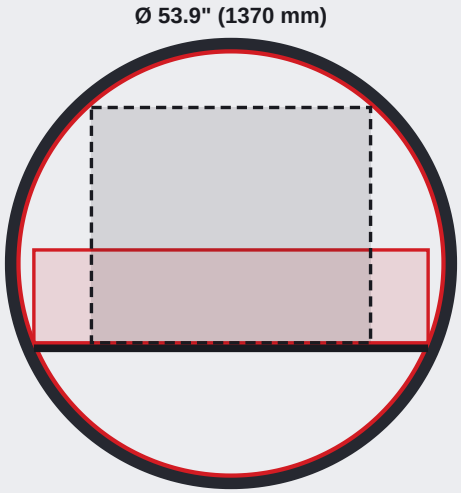

MAX. PRODUCT SECTION (W x H)

PANEL
50.0" x 11.8" (1270 x 300 mm)

CABINET
35.4" x 29.9" (900 x 760 mm)

Max. product section through the ring, drawn to scale. Inches (millimeters).

OZ MACHINE USA
2690 West 3rd Court, Hialeah, FL 33010
+1 833-390-0060 (toll-free) · sales@ozmachineusa.com

USA · CANADA · MEXICO

Product data, descriptions and illustrations may change without prior notice.