OZ MACHINE USA

GO 600

Semi-Automatic Orbital Stretch Wrapper

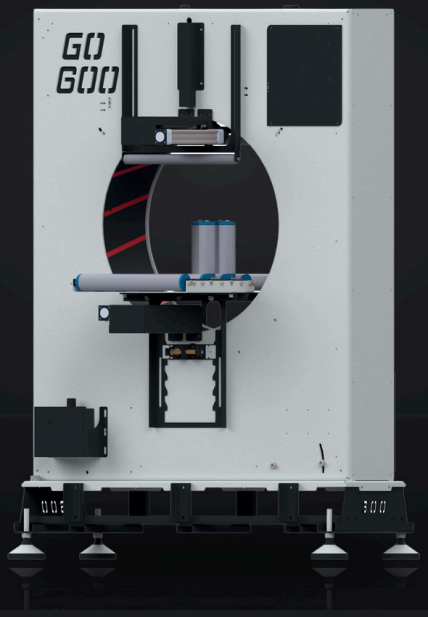

A compact ring wrapper for profiles, moldings, panels and small parts. The operator feeds the product over the roller conveyor and runs the ring with a foot pedal; the double film carriage wraps from both sides, and no compressed air is needed.

25.2"	5–125 rpm	22.8 x 14.2"	2
Ring diameter	Ring speed	Max. product passage	Film carriages

KEY FEATURES

- Foot pedal control, simple to run
- Adjustable ring speed
- Unlimited product length
- Double film carriage as standard
- No compressed air needed
- Compact footprint

Power	Voltage	Air	Dimensions (W x L x H)	Weight
0.375 kW / 0.5 HP	220V 1P, 60 Hz	Not required	45.3 x 32.3 x 56.3"	485 lb

TECHNICAL DATA

GO 600

Semi-Automatic Orbital Stretch Wrapper

OZ MACHINE USA

WRAPPING

Ring diameter (clear opening)	25.2" (640 mm)
Ring speed	5–125 rpm
Max. product passage	22.8" W x 14.2" H (580 x 360 mm)
Max. square section	15.0" x 15.0" (380 x 380 mm)
Max. diagonal	21.1" (537 mm)
Min. product length	10" (250 mm), with bridge
Max. product length	Unlimited

STRETCH FILM

Film width	4" / 5" (100 / 125 mm)
Film roll outer diameter	9.06" (230 mm)
Roll core	3" (76 mm); 1.5" (38 mm) option
Film thickness	15–30 µm

CONVEYOR

Type	Roller, 19.7" x 15.75" (500 x 400 mm)
Working height	34.7" (882 mm)

STANDARD EQUIPMENT

Semi-automatic, foot pedal control	●
Double film carriage	●
Roller conveyor	●
No compressed air needed	●

OPTIONAL EQUIPMENT

Additional roller conveyor	○
Automatic film cutting	○

ELECTRICAL

Power	0.375 kW (0.5 HP)
Voltage	220V 1P, 60 Hz (110–120V 1P option)
Air	Not required

DIMENSIONS & WEIGHT

W x L x H	45.3 x 32.3 x 56.3" (1150 x 820 x 1430 mm)
Weight	485 lb (220 kg)

● Standard ○ Optional

GO 600

Semi-Automatic Orbital Stretch Wrapper

OZ MACHINE USA

FRONT AND SIDE VIEW

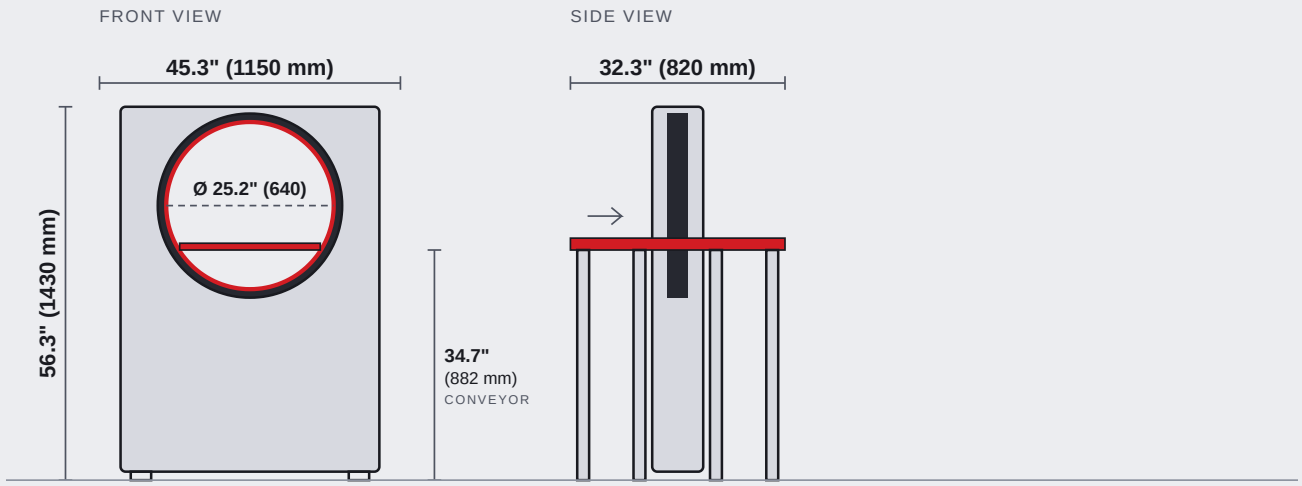

Simplified layout. Dimensions in inches (millimeters).

PRODUCT PASSAGE

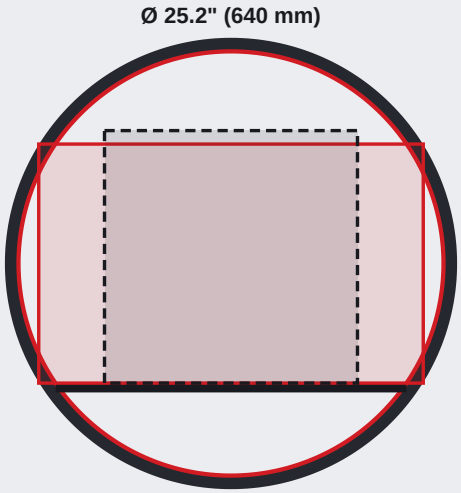

MAX. PRODUCT SECTION (W x H)

MAX. W x H
22.8" x 14.2" (580 x 360 mm)

SQUARE
15.0" x 15.0" (380 x 380 mm)

Max. product section through the ring, drawn to scale. Inches (millimeters).

OZ MACHINE USA
2690 West 3rd Court, Hialeah, FL 33010
+1 833-390-0060 (toll-free) · sales@ozmachineusa.com

USA · CANADA · MEXICO

Product data, descriptions and illustrations may change without prior notice.