OZ MACHINE USA

JOY 1550

Automatic Orbital Stretch Wrapping Line

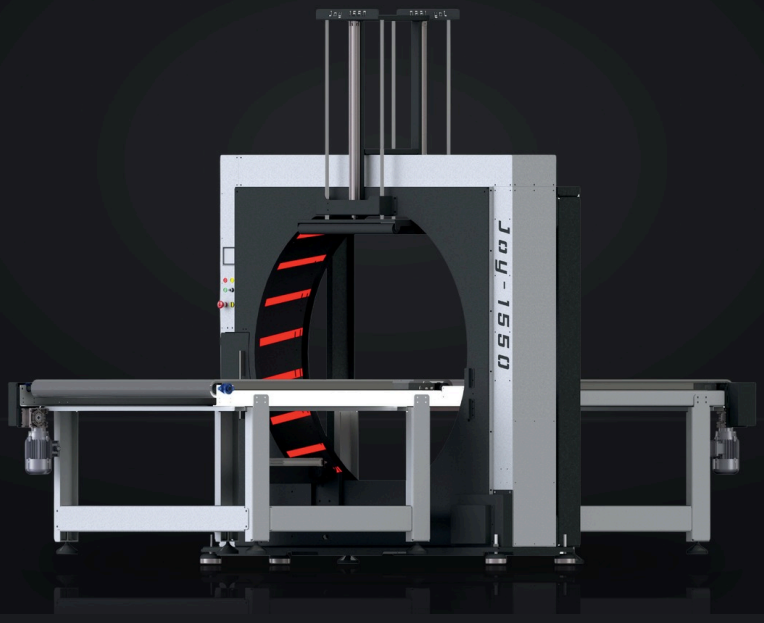

A large-ring automatic wrapper for wide panels and cabinets. Four conveyor widths fit the product range, and the photocell, top pressure rollers and automatic film clamping and cutting keep the cycle running without the operator.

61.0"	5–75 rpm	58.3 x 35.8"	4
Ring diameter	Ring speed	Max. width x height	Conveyor options

KEY FEATURES

- Fully automatic with industrial PLC
- Cabinets up to 39.4" x 35.8"
- Four conveyor widths, lifting platform option
- Panels up to 58.3" wide
- 9.84" film for wide coverage
- AI vision operator option

Power	Voltage	Air	Dimensions (W x L x H)	Weight
3 kW / 4 HP	220V 3P, 60 Hz	100 psi	88.6 x 157.5 x 114.2"	3,086 lb

TECHNICAL DATA

JOY 1550

Automatic Orbital Stretch Wrapping Line

OZ MACHINE USA

WRAPPING

Ring diameter (clear opening)	61.0" (1550 mm)
Ring speed	5–75 rpm
Max. passage, panel	58.3" x 11.8" (1480 x 300 mm)
Max. passage, cabinet	39.4" x 35.8" (1000 x 910 mm)
Min. product length	15.7" (400 mm)
Max. product length	Unlimited

STRETCH FILM

Film width	9.84" (250 mm)
Film roll outer diameter	8.66" (220 mm)
Roll core	3" (76 mm); 1.5" (38 mm) option
Film thickness	15–30 µm

CONVEYOR

Standard (W x L)	43.3" x 70.9" (1100 x 1800 mm)
Narrow / wide	35.4" / 51.2" x 70.9" (900 / 1300 x 1800 mm)
With lifting platform	43.3" x 82.7" (1100 x 2100 mm)
Load	67 lb/ft (100 kg/m)
Working height	30.7"–35.4" (780–900 mm), adjustable

STANDARD EQUIPMENT

Fully automatic, industrial PLC	●
Photocell product detection	●
Motorized belt conveyors	●
Mechanical film tensioner	●
Automatic top pressure rollers	●
Automatic film clamping and cutting	●

OPTIONAL EQUIPMENT

Double film carriage (2x speed)	○
AI vision operator	○
Film break detection and auto-stop	○
Integrated labeling system	○
Infeed lifting platform	○
Wi-Fi / remote access	○
W unit (bubble / foam wrap)	○

AIR & ELECTRICAL

Power	3 kW (4 HP)
Voltage	220V 3P, 60 Hz (480V 3P option)
Air	100 psi, ~1.0 CFM

DIMENSIONS & WEIGHT

W x L x H	88.6 x 157.5 x 114.2" (2250 x 4000 x 2900 mm)
Weight	3,086 lb (1400 kg)

● Standard ○ Optional

JOY 1550

Automatic Orbital Stretch Wrapping Line

OZ MACHINE USA

FRONT AND SIDE VIEW

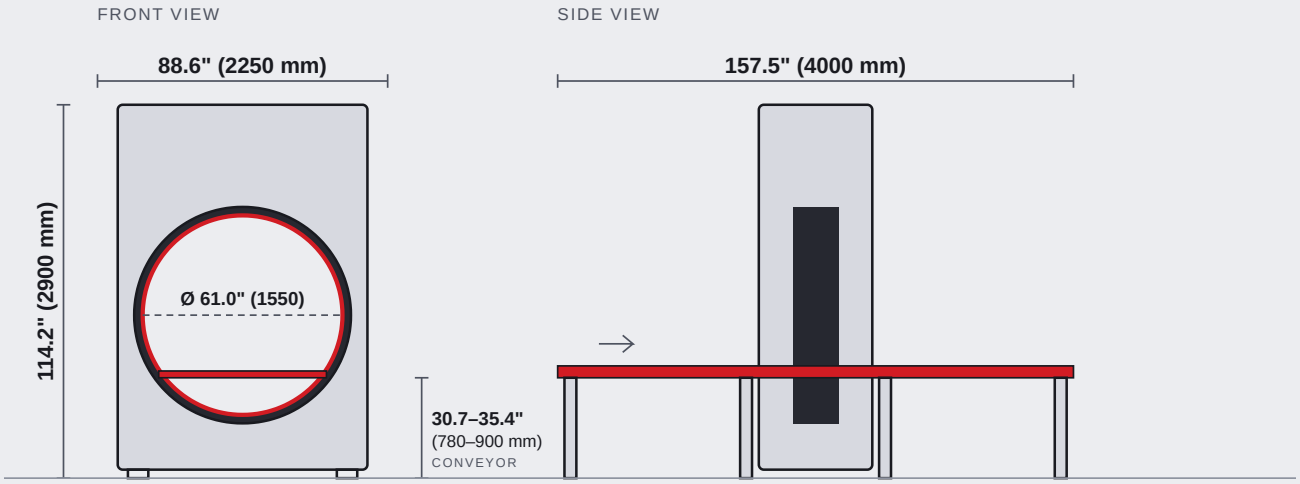

Simplified layout. Dimensions in inches (millimeters).

PRODUCT PASSAGE

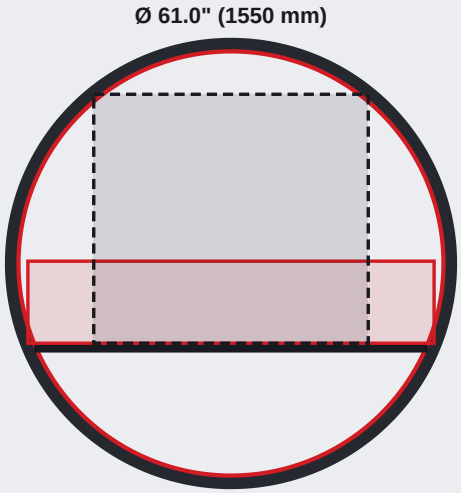

MAX. PRODUCT SECTION (W x H)

PANEL
58.3" x 11.8" (1480 x 300 mm)

CABINET
39.4" x 35.8" (1000 x 910 mm)

Max. product section through the ring, drawn to scale. Inches (millimeters).

OZ MACHINE USA
2690 West 3rd Court, Hialeah, FL 33010
+1 833-390-0060 (toll-free) · sales@ozmachineusa.com

USA · CANADA · MEXICO

Product data, descriptions and illustrations may change without prior notice.