OZ MACHINE USA

JOY 1250

Automatic Orbital Stretch Wrapping Line

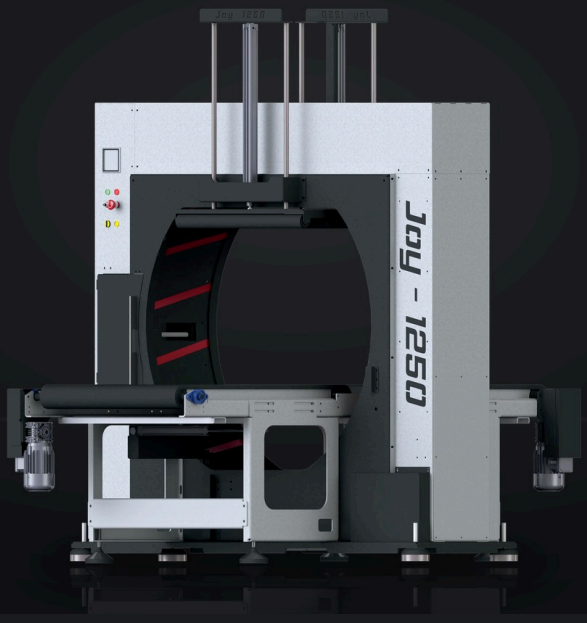

A fully automatic ring wrapper for panels, doors and cabinets. The photocell starts the cycle, belt conveyors carry the product through the ring, and top pressure, film clamping and cutting are automatic; the conveyor height adjusts to the line.

49.2"	5–75 rpm	45.3 x 28.1"	Auto
Ring diameter	Ring speed	Max. width x height	Clamp and cut

KEY FEATURES

- Fully automatic with industrial PLC
- Panels up to 45.3" wide
- Automatic top pressure, clamping and cutting
- Photocell product detection
- Cabinets up to 29.5" x 28.1"
- Adjustable conveyor height

Power	Voltage	Air	Dimensions (W x L x H)	Weight
1.1 kW / 1.5 HP	220V 1P, 60 Hz	100 psi	78.7 x 90.6 x 94.5"	1,323 lb

TECHNICAL DATA

JOY 1250

Automatic Orbital Stretch Wrapping Line

OZ MACHINE USA

WRAPPING

Ring diameter (clear opening)	49.2" (1250 mm)
Ring speed	5–75 rpm
Max. passage, panel	45.3" x 9.8" (1150 x 250 mm)
Max. passage, cabinet	29.5" x 28.1" (750 x 715 mm)
Min. product length	15.7" (400 mm)
Max. product length	Unlimited

STRETCH FILM

Film width	5" / 6.7" (125 / 170 mm)
Film roll outer diameter	8.66" (220 mm)
Roll core	3" (76 mm); 1.5" (38 mm) option
Film thickness	15–30 µm

CONVEYOR

Conveyor (W x L)	29.5" x 39.4" (750 x 1000 mm)
Total working width	63.8" (1620 mm)
Load	50 lb/ft (75 kg/m)
Working height	30.7"–37.4" (780–950 mm), adjustable

STANDARD EQUIPMENT

Fully automatic, industrial PLC	●
Photocell product detection	●
Motorized belt conveyors	●
Mechanical film tensioner	●
Automatic top pressure rollers	●
Automatic film clamping and cutting	●

OPTIONAL EQUIPMENT

Touch panel and encoder package	○
Double film carriage (2x speed)	○
Film break detection and auto-stop	○
Integrated labeling system	○
Wi-Fi / remote access	○
Roller conveyors, safety fence	○
W unit (bubble / foam wrap)	○

AIR & ELECTRICAL

Power	1.1 kW (1.5 HP)
Voltage	220V 1P, 60 Hz (110–120V 1P option)
Air	100 psi, ~0.7 CFM

DIMENSIONS & WEIGHT

W x L x H	78.7 x 90.6 x 94.5" (2000 x 2300 x 2400 mm)
Weight	1,323 lb (600 kg)

● Standard ○ Optional

JOY 1250

Automatic Orbital Stretch Wrapping Line

OZ MACHINE USA

FRONT AND SIDE VIEW

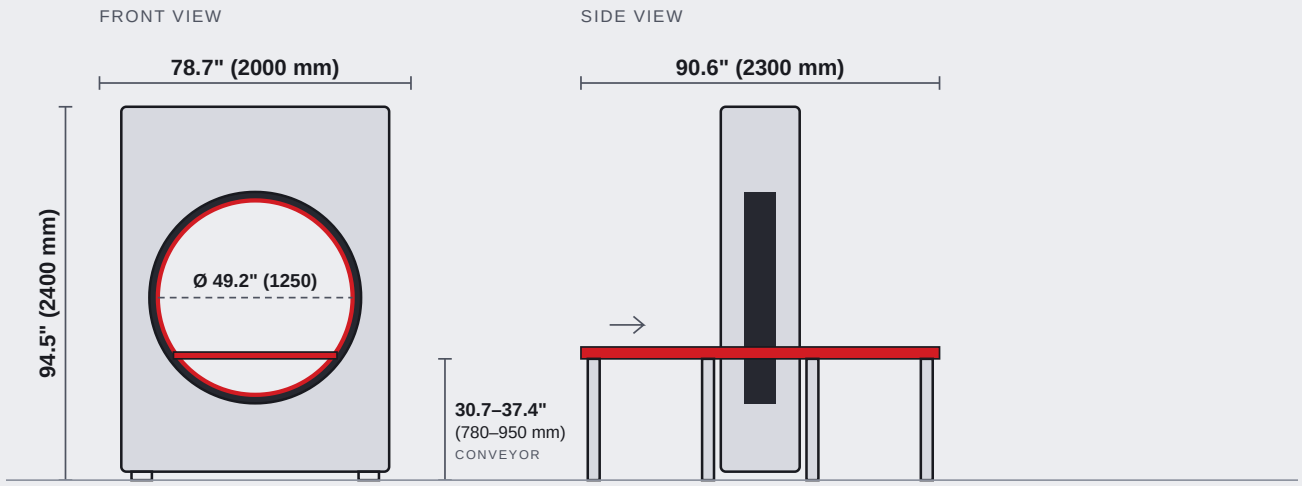

Simplified layout. Dimensions in inches (millimeters).

PRODUCT PASSAGE

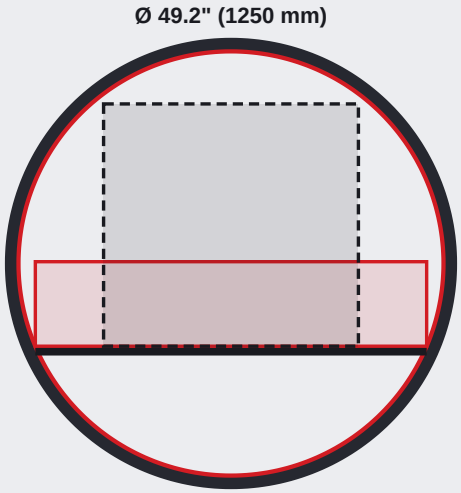

MAX. PRODUCT SECTION (W x H)

PANEL
45.3" x 9.8" (1150 x 250 mm)

CABINET
29.5" x 28.1" (750 x 715 mm)

Max. product section through the ring, drawn to scale. Inches (millimeters).

OZ MACHINE USA
2690 West 3rd Court, Hialeah, FL 33010
+1 833-390-0060 (toll-free) · sales@ozmachineusa.com

USA · CANADA · MEXICO

Product data, descriptions and illustrations may change without prior notice.