OZ MACHINE USA

PRO 1700

Fully Automatic Horizontal Stretch Wrapping Line

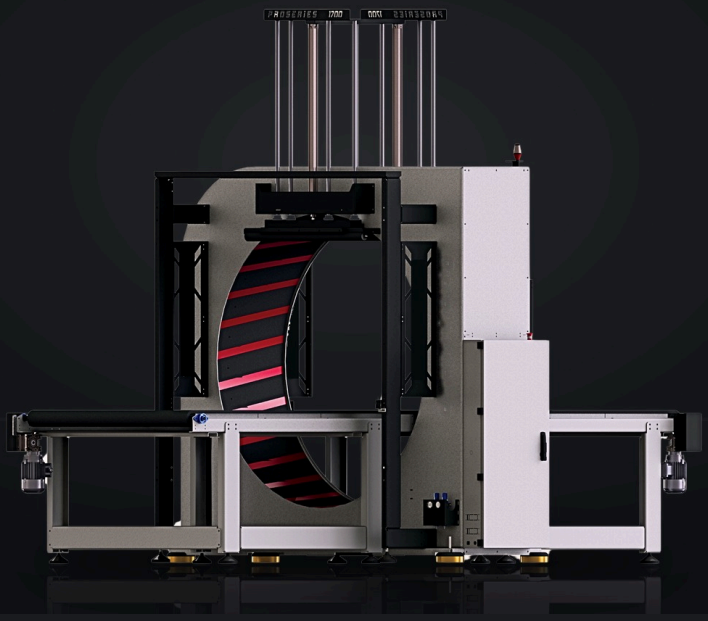

A large automatic line for cabinets, crates and big panels. Cabinets up to 49.2" x 37.4" pass the ring, and the optional infeed lifting platform raises the cabinet to working height so the operator can fit corner protectors easily.

66.9"	5–60 rpm	62.2"	49.2 x 37.4"
Ring diameter	Ring speed	Max. panel width	Max. cabinet section

KEY FEATURES

- 7" touch panel with unlimited recipes
- Cabinets up to 49.2" x 37.4"
- Single or double film carriage
- Panels up to 62.2" wide
- Infeed lifting platform option
- Constant film tension system

Power	Voltage	Air	Dimensions (W x L x H)	Weight
3 kW / 4 HP	220V 3P, 60 Hz	100 psi	102.4 x 157.5 x 108.3"	3,527 lb

TECHNICAL DATA

PRO 1700

Fully Automatic Horizontal Stretch Wrapping Line

OZ MACHINE USA

WRAPPING

Ring diameter (clear opening)	66.9" (1700 mm)
Ring speed	5–60 rpm
Max. passage, panel	62.2" x 11.8" (1580 x 300 mm)
Max. passage, cabinet	49.2" x 37.4" (1250 x 950 mm)
Max. product height	36.6" (930 mm)
Min. product length (with bridge)	29.5" (750 mm)

STRETCH FILM

Film width	9.84" (250 mm)
Film roll outer diameter	9.45" (240 mm)
Roll core	3" (76 mm); 1.5" (38 mm) option
Film thickness	15–30 µm

CONVEYOR

Conveyor (W x L)	51.2" x 70.9" (1300 x 1800 mm)
With lifting platform	51.2" x 82.7" (1300 x 2100 mm)
Load	60 lb/ft (90 kg/m)
Working height	35.4" (900 mm)

STANDARD EQUIPMENT

7" touch panel, unlimited recipes	●
Film tensioner with constant tension system	●
Photocell product detection	●
Automatic top pressure rollers	●
Automatic film clamping and cutting	●
Motorized belt conveyors, speed and reverse	●
Adjustable short-part bridge	●
Package counter, remote access	●

OPTIONAL EQUIPMENT

Integrated labeling system	○
Label scanner and reprint system	○
Film break detection and auto-stop	○
AI vision operator (sets the wrap program)	○
Double film carriage (2x speed)	○
Motorized short-part bridge	○
Infeed lifting platform	○
W unit (bubble / foam wrap)	○

AIR & ELECTRICAL

Power	3 kW (4 HP)
Voltage	220V 3P, 60 Hz (480V 3P option)
Air	100 psi, ~1.0 CFM

DIMENSIONS & WEIGHT

W x L x H	102.4 x 157.5 x 108.3" (2600 x 4000 x 2750 mm)
Weight	3,527 lb (1600 kg)

● Standard ○ Optional

PRO 1700

Fully Automatic Horizontal Stretch Wrapping Line

OZ MACHINE USA

FRONT AND SIDE VIEW

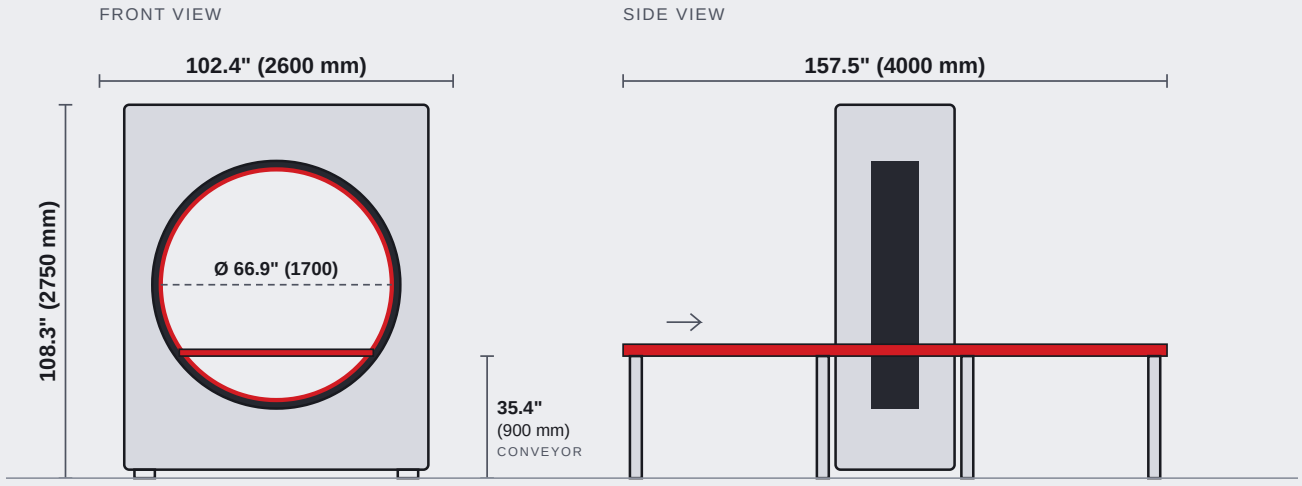

Simplified layout. Dimensions in inches (millimeters).

PRODUCT PASSAGE

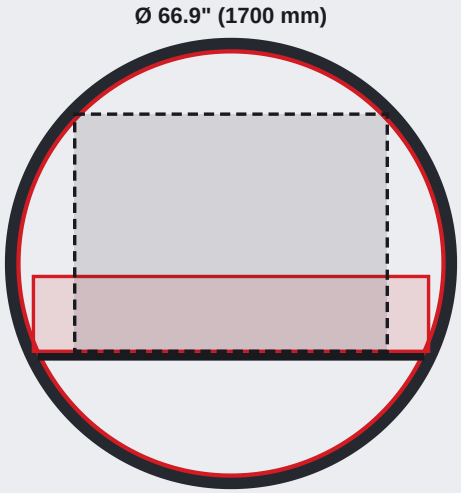

MAX. PRODUCT SECTION (W x H)

PANEL
62.2" x 11.8" (1580 x 300 mm)

CABINET
49.2" x 37.4" (1250 x 950 mm)

Max. product section through the ring, drawn to scale. Inches (millimeters).

OZ MACHINE USA
2690 West 3rd Court, Hialeah, FL 33010
+1 833-390-0060 (toll-free) · sales@ozmachineusa.com

USA · CANADA · MEXICO

Product data, descriptions and illustrations may change without prior notice.