OZ MACHINE USA

PRO 1900

Fully Automatic Horizontal Stretch Wrapping Line

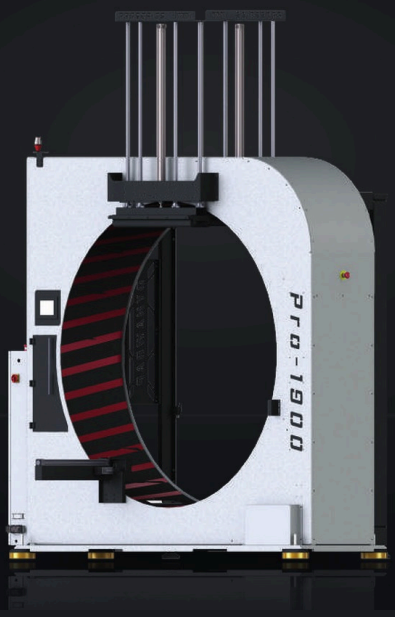

A heavy-duty ring wrapper for cabinets, crates and large loads up to 47.2" x 43.3". Conveyors are sized to the application, and the touch panel recipes and automatic clamping and cutting run the cycle.

75.6"	50 rpm	47.2 x 43.3"	9.85"
Ring diameter	Ring speed	Max. product passage	Film width

KEY FEATURES

- 7" touch panel with unlimited recipes
- Constant film tension system
- Conveyors built per application
- Loads up to 47.2" x 43.3"
- Automatic top pressure, clamping and cutting
- Photocell product detection

Power	Voltage	Air	Dimensions (W x L x H)	Weight
3 kW / 4 HP	220V 3P, 60 Hz	100 psi	105.5 x 62.0 x 98.0"	4,189 lb

TECHNICAL DATA

PRO 1900

Fully Automatic Horizontal Stretch Wrapping Line

OZ MACHINE USA

WRAPPING

Ring diameter (clear opening)	75.6" (1920 mm)
Ring speed	50 rpm
Max. product passage	47.2" x 43.3" (1200 x 1100 mm)
Min. product length (with bridge)	23.6" (600 mm)

STRETCH FILM

Film width	9.85" (250 mm); 5" / 6.7" also fit
Film roll outer diameter	9.45" (240 mm)
Roll core	3" (76 mm)
Max. roll weight	17.6 lb (8 kg)
Film thickness	23–35 µm

CONVEYOR

Conveyors	Custom (per application)

STANDARD EQUIPMENT

7" touch panel, unlimited recipes	●
Film tensioner with constant tension system	●
Photocell product detection	●
Automatic top pressure rollers	●
Automatic film clamping and cutting	●
Motorized belt conveyors, speed and reverse	●
Adjustable short-part bridge	●
Package counter, remote access	●

OPTIONAL EQUIPMENT

Integrated labeling system	○
Label scanner and reprint system	○
Film break detection and auto-stop	○
AI vision operator (sets the wrap program)	○
Double film carriage (2x speed)	○
Motorized short-part bridge	○
W unit (bubble / foam wrap)	○

AIR & ELECTRICAL

Power	3 kW (4 HP)
Voltage	220V 3P, 60 Hz (480V 3P option)
Air	100 psi, ~1.4 CFM

DIMENSIONS & WEIGHT

W x L x H	105.5 x 62.0 x 98.0" (2680 x 1575 x 2490 mm)
Weight	4,189 lb (1900 kg)
Note	Excluding conveyors

● Standard ○ Optional

PRO 1900

Fully Automatic Horizontal Stretch Wrapping Line

OZ MACHINE USA

FRONT AND SIDE VIEW

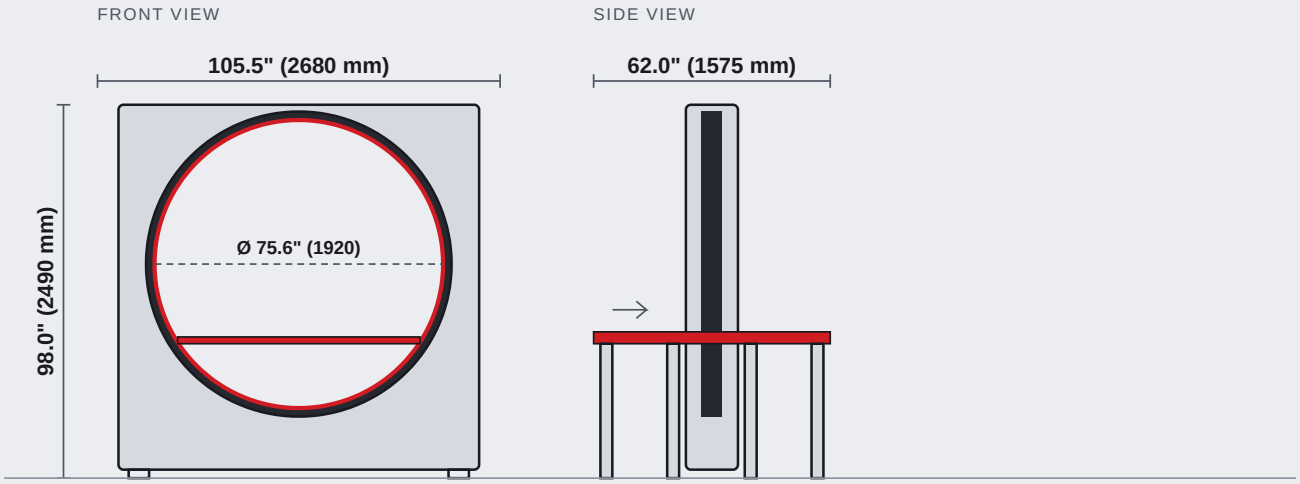

CONVEYORS NOT INCLUDED IN DIMENSIONS

Simplified layout. Dimensions in inches (millimeters).

PRODUCT PASSAGE

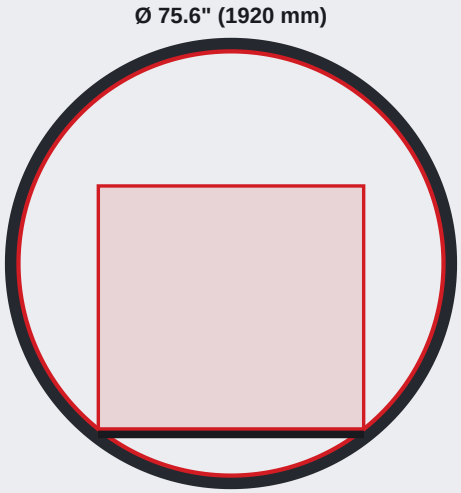

MAX. PRODUCT SECTION (W x H)

MAX. W x H
47.2" x 43.3" (1200 x 1100 mm)

Max. product section through the ring, drawn to scale. Inches (millimeters).

OZ MACHINE USA
2690 West 3rd Court, Hialeah, FL 33010
+1 833-390-0060 (toll-free) · sales@ozmachineusa.com

USA · CANADA · MEXICO

Product data, descriptions and illustrations may change without prior notice.