OZ MACHINE USA

JOY 450

Automatic Orbital Stretch Wrapping Line



A fully automatic small-ring wrapper for profiles, moldings and narrow parts. A photocell detects the product, the belt conveyors carry it through the ring, and top pressure, film clamping and cutting run without the operator.

17.7"	80 rpm	15.7 x 5.9"	Auto
Ring diameter	Ring speed	Max. product passage	Clamp and cut

KEY FEATURES

- Fully automatic with industrial PLC
- Motorized belt conveyors
- Automatic film clamping and cutting
- Photocell product detection
- Automatic top pressure rollers
- Unlimited product length

Power	Voltage	Air	Dimensions (W x L x H)	Weight
1.5 kW / 2 HP	220V 1P, 60 Hz	100 psi	45.3 x 86.6 x 51.2"	705 lb

TECHNICAL DATA

JOY 450

Automatic Orbital Stretch Wrapping Line

OZ MACHINE USA

WRAPPING

Ring diameter (clear opening)	17.7" (450 mm)
Ring speed	80 rpm
Max. passage, flat	15.7" x 5.9" (400 x 150 mm)
Max. passage, tall	11.8" x 8.7" (300 x 220 mm)
Min. length (with bridge)	15.7" (400 mm)
Max. product length	Unlimited

STRETCH FILM

Film width	6.7" (170 mm); 5" also fits
Film roll outer diameter	7.5" (190 mm)
Roll core	3" (76 mm)
Max. roll weight	7 lb
Film thickness	12–35 µm

CONVEYOR

Conveyor (W x L)	7.5" x 37.4" (190 x 950 mm)
Load	34 lb/ft (50 kg/m)
Speed	39 ft/min (12 m/min)
Working height	29.5" (750 mm)

STANDARD EQUIPMENT

Fully automatic, industrial PLC	●
Photocell product detection	●
Motorized belt conveyors	●
Mechanical film tensioner	●
Automatic top pressure rollers	●
Automatic film clamping and cutting	●

OPTIONAL EQUIPMENT

Double film carriage (2x speed)	○
Roller conveyors	○
Safety fence	○

AIR & ELECTRICAL

Power	1.5 kW (2 HP)
Voltage	220V 1P, 60 Hz (110V 1P option)
Air	100 psi, ~0.7 CFM

DIMENSIONS & WEIGHT

W x L x H	45.3 x 86.6 x 51.2" (1150 x 2200 x 1300 mm)
Weight	705 lb (320 kg)

● Standard ○ Optional

JOY 450

Automatic Orbital Stretch Wrapping Line

OZ MACHINE USA

FRONT AND SIDE VIEW

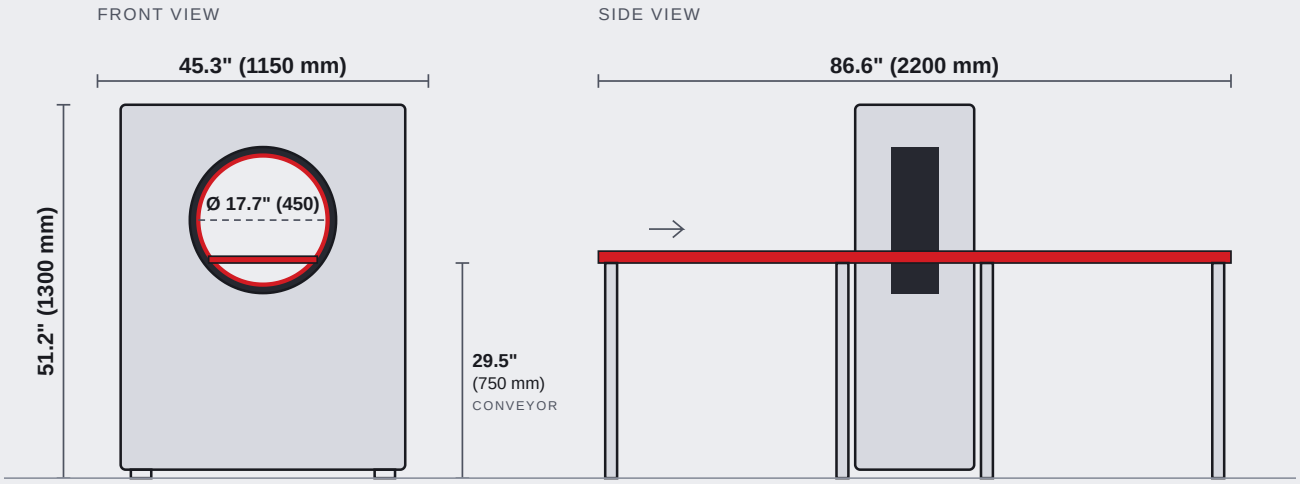

Simplified layout. Dimensions in inches (millimeters).

PRODUCT PASSAGE

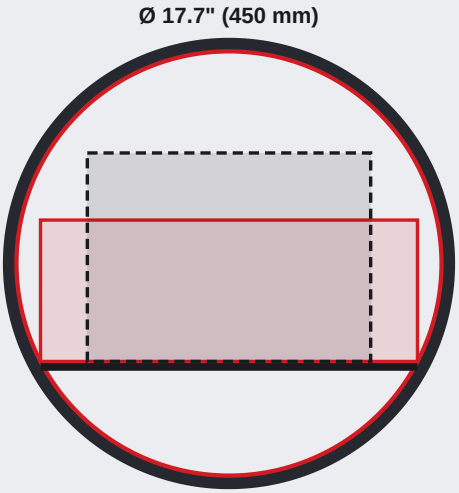

MAX. PRODUCT SECTION (W x H)

FLAT
15.7" x 5.9" (400 x 150 mm)

SQUARE
11.8" x 8.7" (300 x 220 mm)

Max. product section through the ring, drawn to scale. Inches (millimeters).

OZ MACHINE USA
2690 West 3rd Court, Hialeah, FL 33010
+1 833-390-0060 (toll-free) · sales@ozmachineusa.com

USA · CANADA · MEXICO

Product data, descriptions and illustrations may change without prior notice.